# APPENDIX B
# HAND CALCULATIONS FOR MODEL VERIFICATION

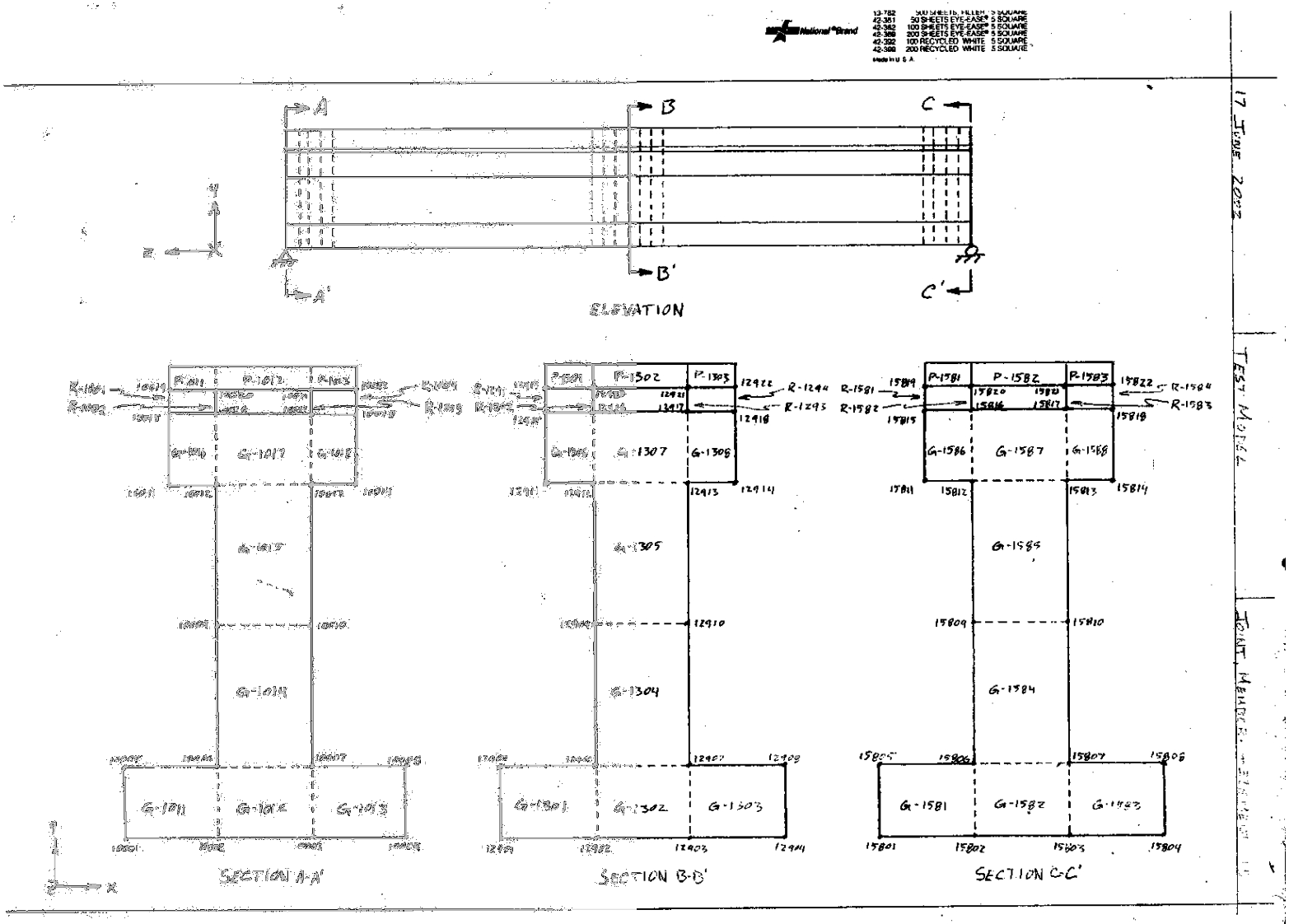
ELEVATION
SECTION A-A'
SECTION B-B'
SECTION C-C'
17 JUNE 2002
TEST MODEL
JOINT MEMBER

TEST MODEL | JOINT COORDINATES

D.2

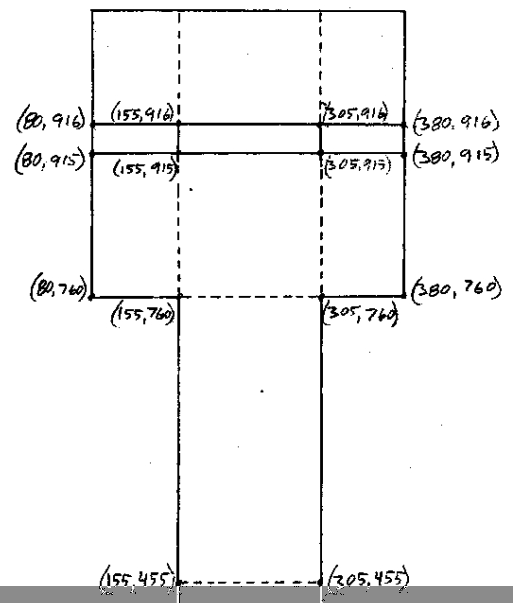


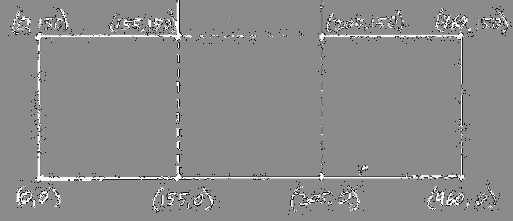

TYPICAL SECTION
ASSUME TYPE 4

GIRDER WITHOUT DECKING

AASHTO TYPE II

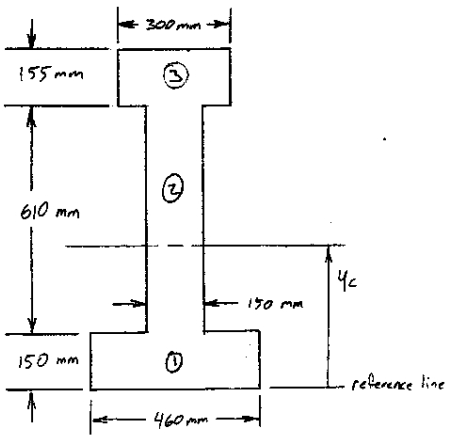


$A_1 = (.460\ m)(.150\ m) = 0.0690\ m^2$
$A_2 = (.150\ m)(.610\ m) = 0.0915\ m^2$
$A_3 = (.300\ m)(.155\ m) = 0.0465\ m^2$

$\Sigma A_n = 0.207\ m^2$

CENTER OF MASS

$$y_c = \frac{\Sigma A_n z_n}{\Sigma A_n}$$

$$y_c = \frac{(.0690\ m^2)(.075\ m) + (.0915\ m^2)(.455\ m) + (.0465\ m^2)(.8375\ m)}{(.207\ m^2)}$$

$$y_c = 0.4143\ m$$

MOMENT OF INERTIA

$$I_x' = \frac{1}{12}bh^3 + Ad^2$$

$$I_x' = \frac{1}{12}(.460\ m)(.150\ m)^3 + (.0690\ m^2)(.075\ m - y_c)^2 + \frac{1}{12}(.150\ m)(.610\ m)^3 + (.0915\ m^2)(.455\ m - y_c)^2 + \frac{1}{12}(.300\ m)(.155\ m)^3 + (.0465\ m^2)(.8375\ m - y_c)^2$$

$$I_x' = 0.0195\ m^4$$

J-2

13 JUNE 2002 | TEST MODEL VERIFICATION | STRESS DUE TO SELF WEIGHT

GIRDER WITHOUT DECKING

AASHTO TYPE II

GIRDER SELF WEIGHT

$\omega = \rho A = (23.5616\ kN/m^3)(.207\ m^2) = 4.8773\ kN/m$

$y_c = .4143\ m$

$I_x' = .0195\ m^4$

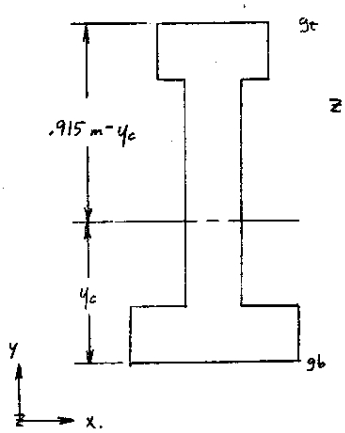


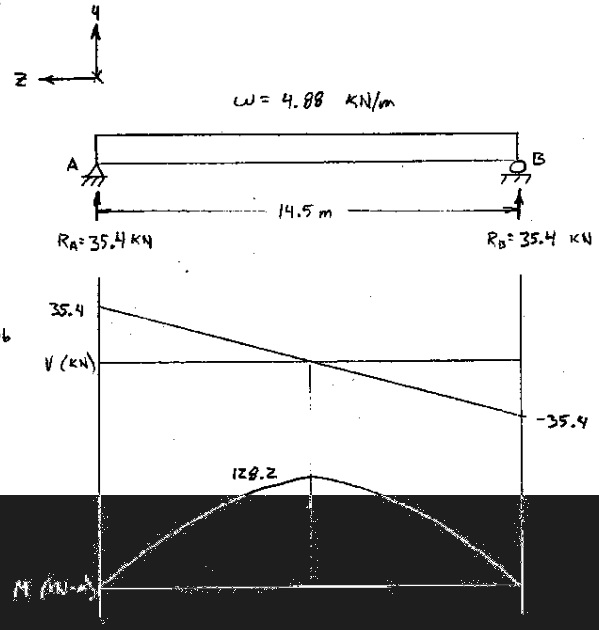


STRESS

$\sigma = -\frac{My}{I}$

$\sigma_{gb} = -\frac{(128.2\ kN\text{-}m)(-y_c)}{I_x'}$

$\sigma_{gb} = 2.725\ kN/m^2\ T$

$\sigma_{gt} = -\frac{(128.2\ kN\text{-}m)(.915m - y_c)}{I_x'}$

$\sigma_{gt} = 3.994\ kN/m^2\ C$

18 JUNE 2002 | TEST MODEL VERIFICATION | STRESS DUE TO POINT LOAD

AASHTO TYPE II

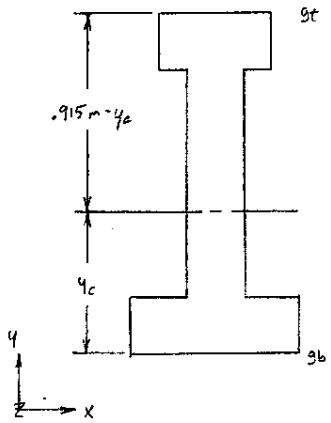


$y_c = .4143$ m

$I_x' = .0195$ m$^4$

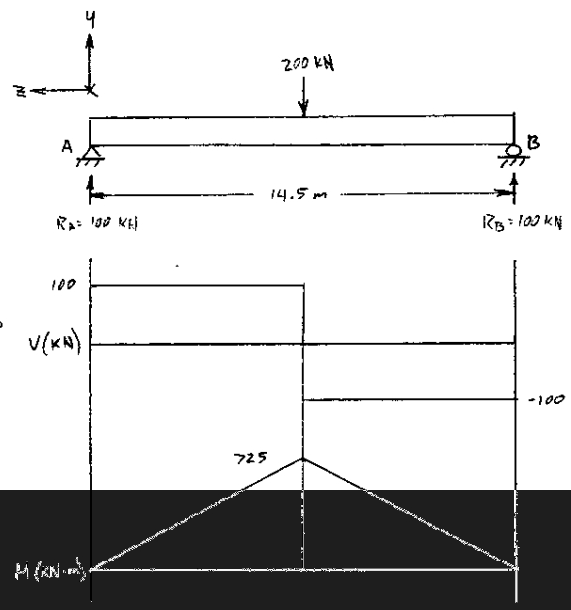


STRESS

$$\sigma = -\frac{My}{I}$$

$$\sigma_{gb} = -\frac{(725 \text{ kN·m})(-y_c)}{I_x'}$$

$$\sigma_{gb} = 17\,415 \text{ kN/m}^2 \text{ T}$$

$$\sigma_{gt} = -\frac{(725 \text{ kN·m})(.915 - y_c)}{I_x'}$$

$$\sigma_{gt} = 18\,634 \text{ kN/m}^2 \text{ C}$$

T-4

18 JUNE 2002 | TEST MODEL VERIFICATION | STRESS DUE TO SELF WEIGHT

GIRDER PLUS DECK

AASHTO TYPE II

GIRDER PLUS DECK SELF WEIGHT

$\omega = \rho A = (23.5616\ kN/m^3)(.267\ m^2) = 6.2909\ kN/m$

$y_c = .4143\ m$

$I_x = .0195\ m^4$

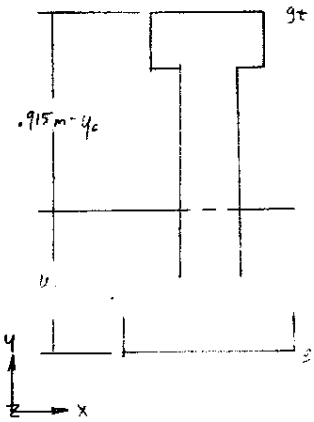


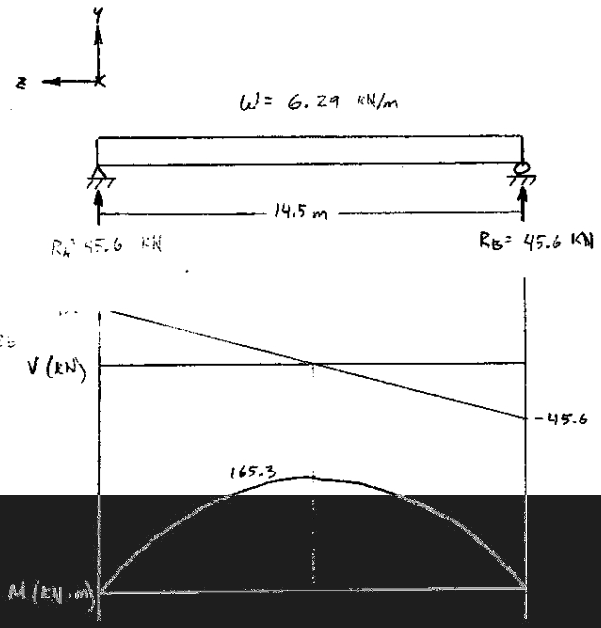


STRESS

$$\sigma = -\frac{My}{I}$$

$$\sigma_{gb} = -\frac{(165.3\ kN\cdot m)(-y_c)}{I_x}$$

$$\sigma_{gt} = -\frac{(165.3\ kN\cdot m)(.915m - y_c)}{I_x}$$

$\sigma_{gb} = 3.515\ kN/m^2$ T

$\sigma_{gt} = 4.249\ kN/m^2$ C